NEC

PNP SILICON TRANSISTOR
2SA992

DESCRIPTION The 2SA992 is best for use as the middle range amplifier in Hi-Fi stereo control amplifiers, power amplifiers, and etc.

FEATURES

- High Voltage. V_{CEO} : −120 V
- Low Output Capacitance. C_{ob} : 2.0 pF TYP. (V_{CB} = −30 V)
- High h_{FE}. h_{FE} : 500 TYP. (V_{CE} = −6.0 V, I_C = −1.0 mA)
- Super Low Noise. NV : 25 mV TYP. (See test circuit.)
- Complementary to 2SC1845.

PACKAGE DIMENSIONS
in millimeters (inches)

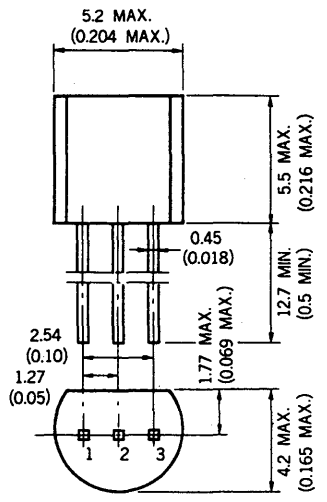

1. EMITTER
2. COLLECTOR
3. BASE

EIAJ : SC-43B
JEDEC : TO-92
IEC : PA33

ABSOLUTE MAXIMUM RATINGS

Maximum Temperatures

- Storage Temperature . . . . . −55 to +125 °C
- Junction Temperature . . . . . +125 °C Maximum

Maximum Power Dissipation (Ta = 25 °C)

- Total Power Dissipation . . . . . 500 mW

Maximum Voltages and Currents (Ta = 25 °C)

- V_{CBO} Collector to Base Voltage . . . . . −120 V
- V_{CEO} Collector to Emitter Voltage . . . . . −120 V
- V_{EBO} Emitter to Base Voltage . . . . . −5.0 V
- I_C Collector Current . . . . . −50 mA
- I_B Base Current . . . . . −10 mA

ELECTRICAL CHARACTERISTICS (Ta = 25 °C)

SYMBOL	CHARACTERISTIC	MIN.	TYP.	MAX.	UNIT	TEST CONDITIONS
h_{FE1}	DC Current Gain	150	500		−	V_{CE} = −6.0 V, I_C = −0.1 mA
h_{FE2}	DC Current Gain	200	500	800	−	V_{CE} = −6.0 V, I_C = −1.0 mA
f_T	Gain Bandwidth Product	50	100		MHz	V_{CE} = −6.0 V, I_E = 1.0 mA
Cob	Output Capacitance		2.0	3.0	pF	V_{CB} = −30 V, I_E = 0, f = 1.0 MHz
NV	Noise Voltage		25	40	mV	V_{CE} = −5.0 V, I_C = −1.0 mA, R_G = 100 kΩ, G_V = 80 dB, f = 10 Hz to 1.0 kHz
I_{CBO}	Collector Cutoff Current			−50	nA	V_{CB} = −120 V, I_E = 0
I_{EBO}	Emitter Cutoff Current			−50	nA	V_{EB} = −5.0 V, I_C = 0
V_{BE}	Base to Emitter Voltage	−0.55	−0.61	−0.65	V	V_{CE} = −6.0 V, I_C = −1.0 mA
$V_{CE(sat)}$	Collector Saturation Voltage		−0.09	−0.30	V	I_C = −10 mA, I_B = −1.0 mA

Classification of h_{FE2}

Rank	P	F	E
Range	200 − 400	300 − 600	400 − 800

h_{FE} Test Conditions : V_{CE} = −6.0 V, I_C = −1.0 mA

TYPICAL CHARACTERISTICS (Ta = 25 °C unless otherwise noted)

TOTAL POWER DISSIPATION vs. AMBIENT TEMPERATURE

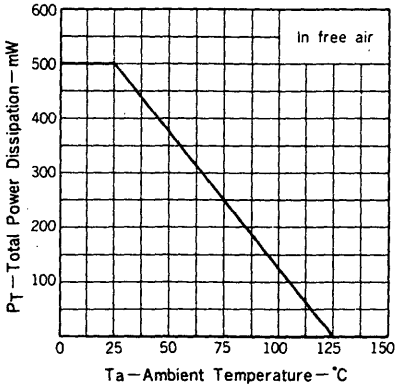

COLLECTOR CURRENT vs. COLLECTOR TO EMITTER VOLTAGE

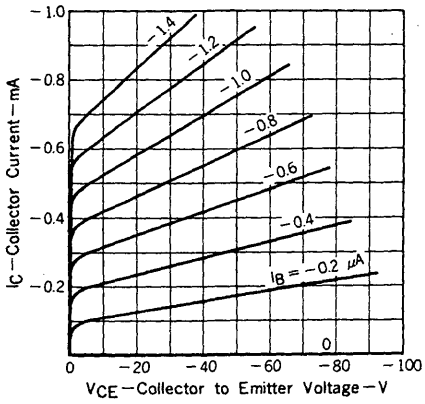

COLLECTOR CURRENT vs. COLLECTOR TO EMITTER VOLTAGE

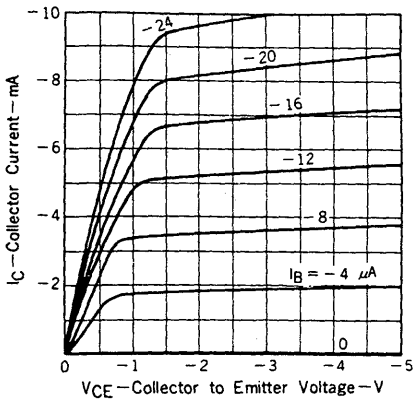

COLLECTOR CURRENT vs. BASE TO EMITTER VOLTAGE

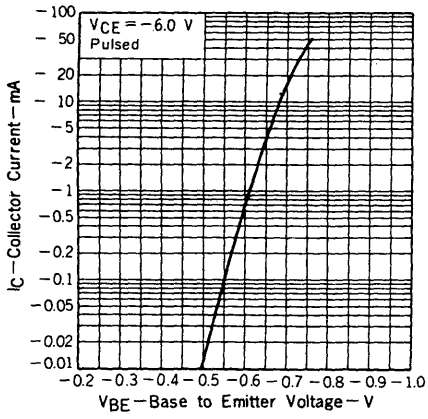

DC CURRENT GAIN vs. COLLECTOR CURRENT

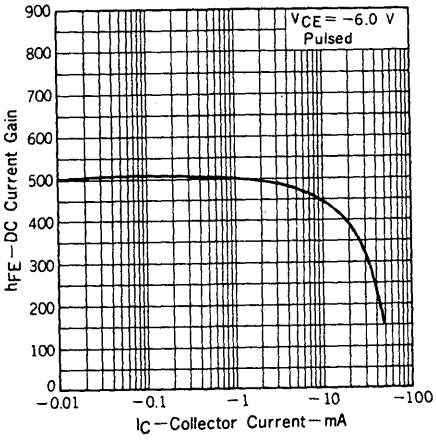

COLLECTOR AND BASE SATURATION VOLTAGE vs. COLLECTOR CURRENT

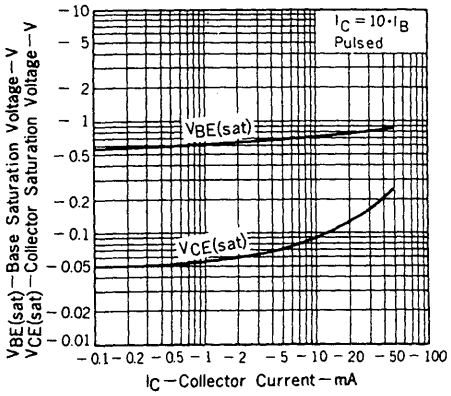

GAIN BANDWIDTH PRODUCT vs. EMITTER CURRENT

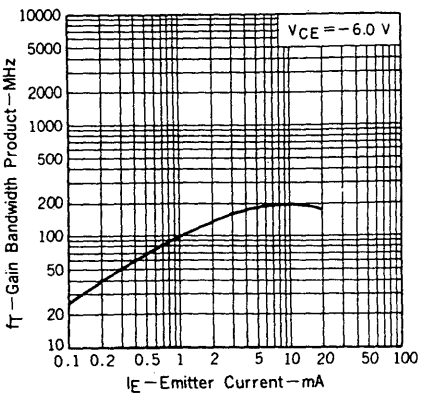

OUTPUT CAPACITANCE vs. COLLECTOR TO BASE VOLTAGE

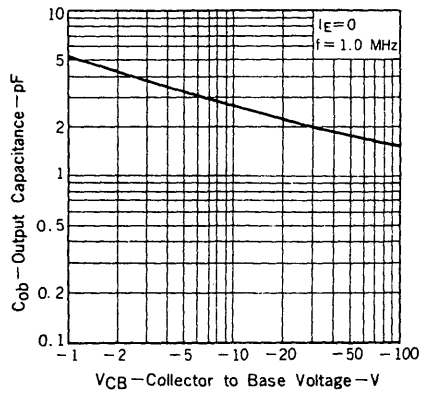

e_n AND i_n vs. COLLECTOR CURRENT

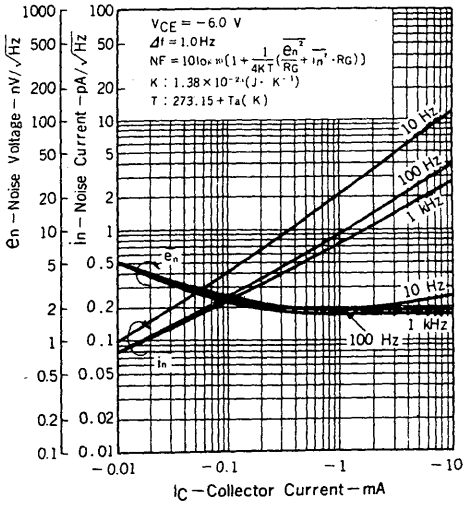

NOISE FIGURE MAP.

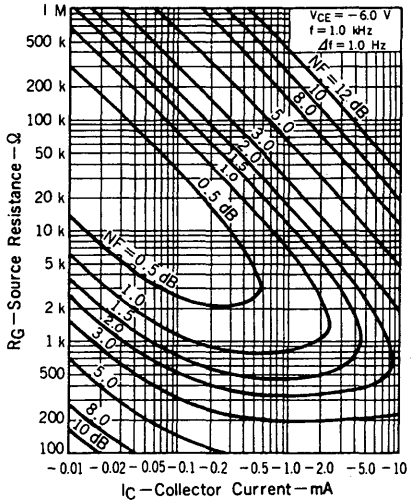

NOISE VOLTAGE TEST CIRCUIT

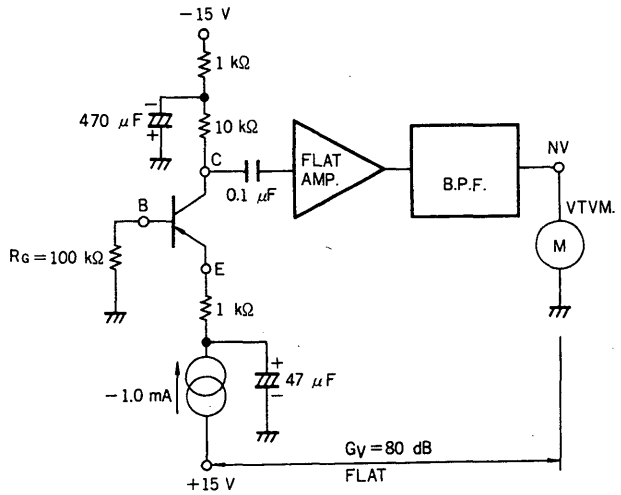

$V_{CE} \fallingdotseq -5$ V, $I_C = -1.0$ mA, $R_G = 100$ kΩ, $G_V = 80$ dB, FLAT(f = 10 Hz to 1.0 kHz)